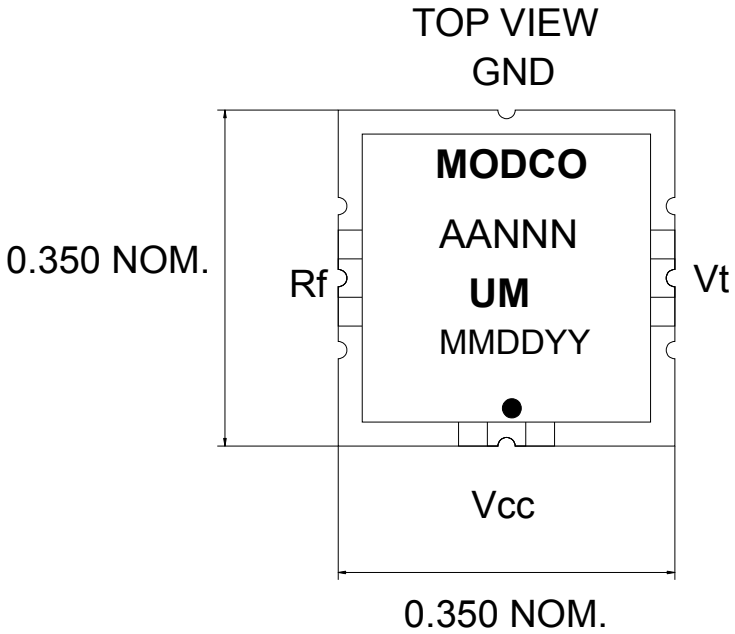

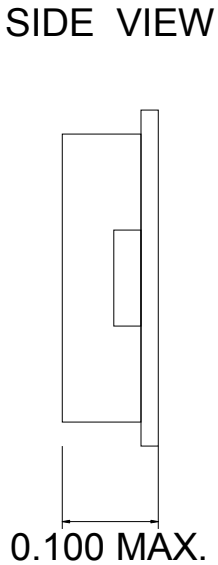

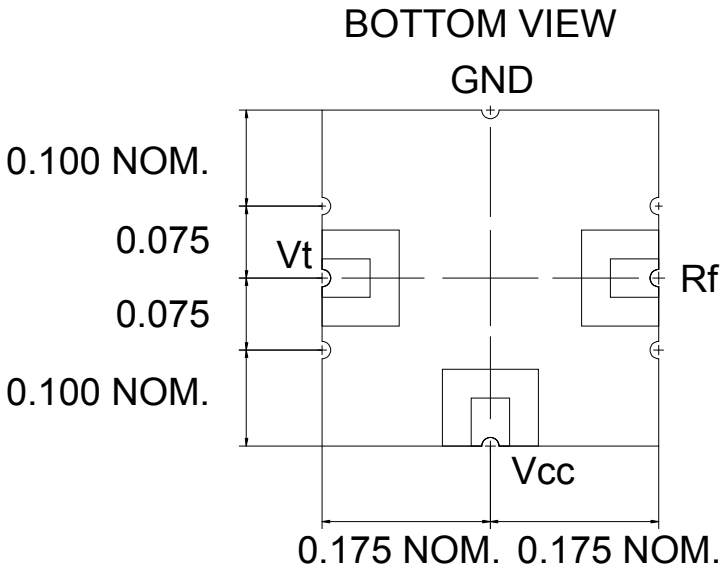

Notes:
1. The case is ground.
2 Soldermask/pad layout may vary depending on model, consult factory.
3. Unless otherwise specified all dimensions are in inches.

Part labeling
Part number: AA=Alpha pre-fix, product family or custom part designator.
NNN=Numeric 3 to 4 digit specific part number
Part type: 2 to 4 alpha part type designator
Date code: MM=month, DD=day, YY=year
Label material is high temp. polyester film, opaque white, with black marking.

Part # → AANNN
Part type → **UM**
Date code → MMDDYY
Dot indicates Vcc → ●

Solder mask/pad details see note 2

fig. 1

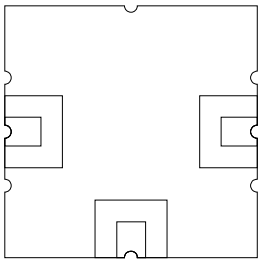

Solder plate /reflow.

fig. 2

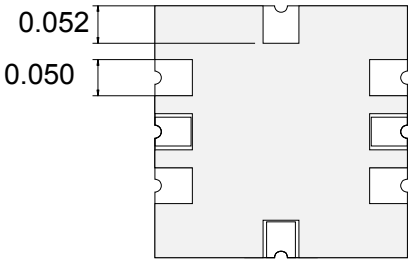

Solder mask over bare copper,
hot air solder level.

PAD DETAIL TYP 3 PLCS.

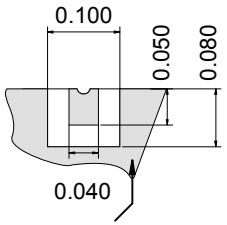

Shaded areas are conductor.

D	Modify solder mask detail nomenclature.
C	Add I/O designators to bottom view.
B	Updated address from 808 to 806.
A	RELEASED ON NEW FORMAT

Revision History

DATE: 08/09/07	*MODCO, INC.* 806 PACKER WAY SPARKS NV 89431 TEL: (775) 331-2441 FAX: (775) 331-6266
BY: D. Johnson	
CHECKED:	
REV: D	TITLE: UM PACKAGE OUTLINE
DRAWING #: UM_SPEC_D.mkd	