TOP VIEW

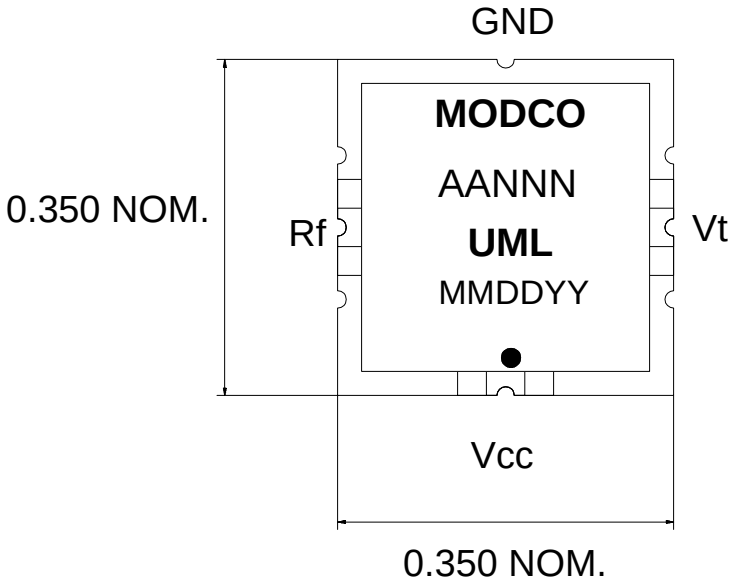

SIDE VIEW

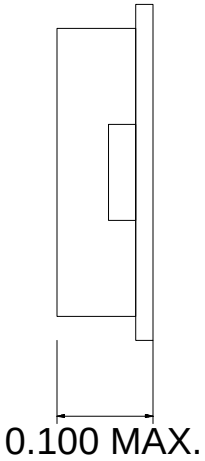

BOTTOM VIEW

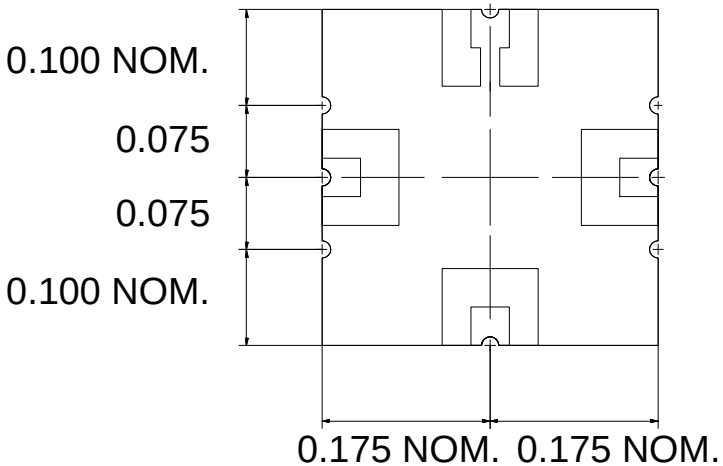

Notes:
1. The case is ground.
2 Soldermask/pad layout may vary depending on model, consult factory.
3. Unless otherwise specified all dimensions are in inches.
4. The Rf output is buffer amplified.

Part labeling
Part number: AA=Alpha pre-fix, product family or custom part designator.
NNN=Numeric 3 to 4 digit specific part number
Part type: 2 to 4 alpha part type designator
Date code: MM=month, DD=day, YY=year
Label material is high temp. polyester film, opaque white, with black marking.

Solder mask/pad details see note 2

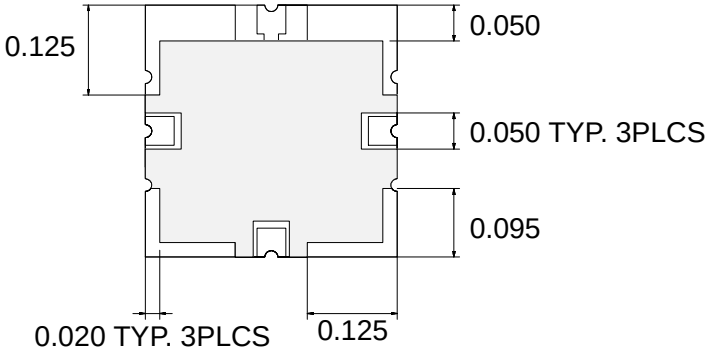

Solder mask over bare copper,
hot air solder level.

PAD DETAIL TYP 3 PLCS.

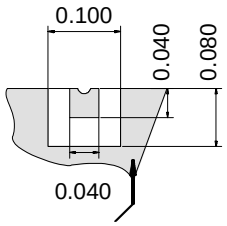

Shaded areas are conductor.

Part # → AANNN
Part type → **UML**
Date code → MMDDYY
Dot indicates Vcc →

B	Updated address from 808 to 806.
A	RELEASED ON NEW FORMAT

Revision History

DATE: 06/04/03	*MODCO, INC.* 806 PACKER WAY SPARKS NV 89431 TEL: (775) 331-2442 FAX: (775) 331-6266
BY: D. Johnson	
CHECKED:	
REV: B	TITLE: UML PACKAGE OUTLINE
DRAWING #: UML_SPEC.mkd	